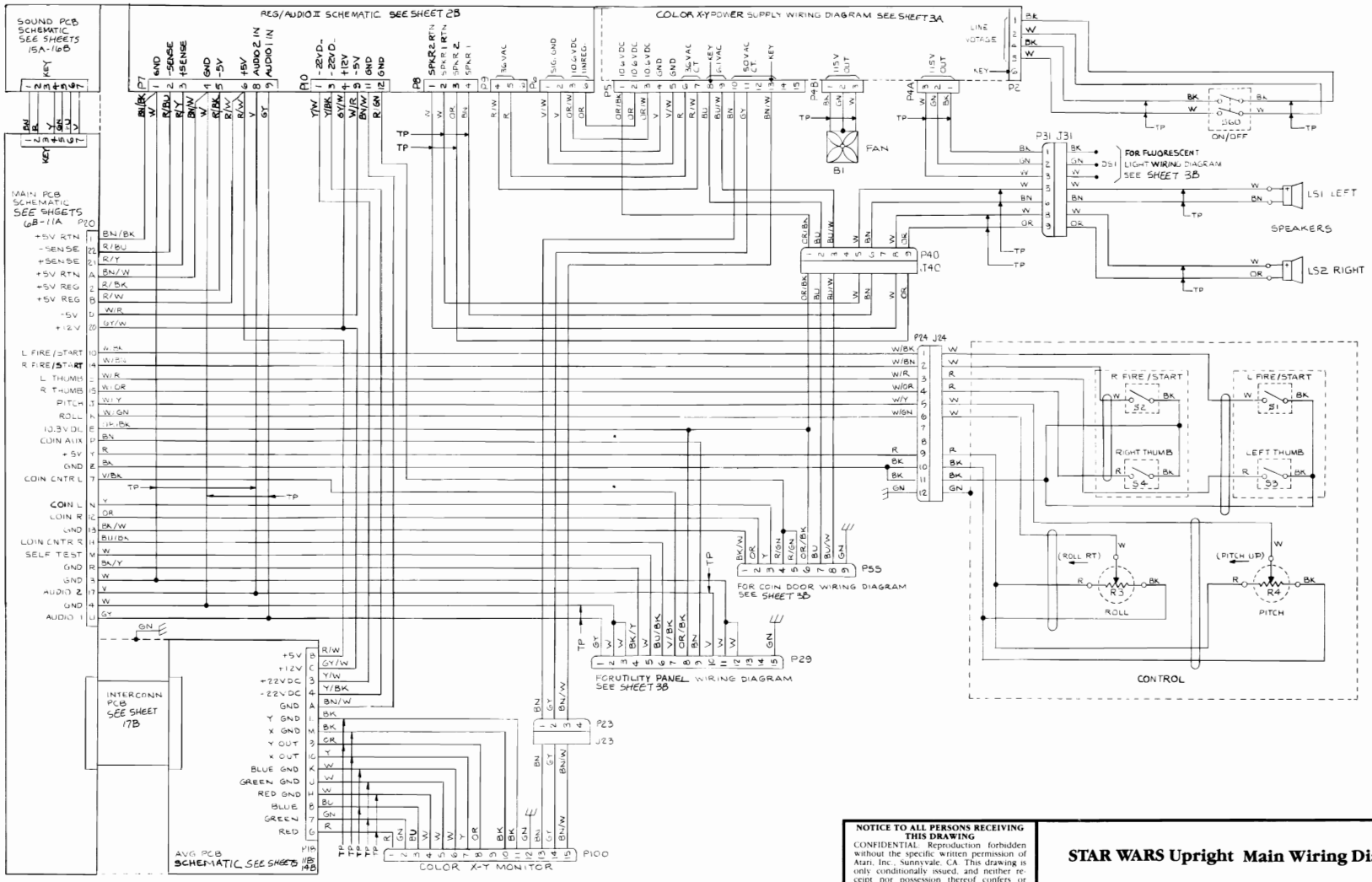

NOTICE TO ALL PERSONS RECEIVING THIS DRAWING

CONFIDENTIAL. Reproduction forbidden without the specific written permission of Atari, Inc., Sunnyvale, CA. This drawing is only conditionally issued, and neither receipt nor possession thereof confers or transfers any right in, or license to use, the subject matter of the drawing or any design or technical information shown thereon, nor any right to reproduce this drawing or any part thereof. Except for manufacture by vendors of Atari, Inc., and for manufacture under the corporation's written license, no right is granted to reproduce this drawing or the subject matter thereof, unless by written agreement with or written permission from the corporation.

STAR WARS Upright Main Wiring Diagram

ATARI®

A Warner Communications Company

© ATARI INC. 1983

SP-225 Sheet 1B
2nd printing